DSO 317 - Collection of Shuttle Humidity Condensate for Analytical Evaluation

Sponsor: J. Travis Brown/SD/483-3764
Investigator: Richard Sauer/SD4

HYPOTHESIS
Contaminants generated by metabolic functions of man and off-gassing of equipment will be present in the spacecraft atmosphere. Water produced from condensation of the atmospheric humidity will contain contaminants from the enclosed environment. Condensate processing and distribution can be complicated by these contaminants.

PURPOSE/OBJECTIVE
The objectives of this DSO are:

1. To characterize the content of the Shuttle's humidity condensate to determine the cause of mechanical difficulties with the humidity condensate separator.

2. To analyze the Shuttle's humidity condensate postflight to determine its organic and ammonia content and to assess the contaminant removal efficiency of the cabin heat exchanger.

3. To ***demonstrate the removal of contaminants from*** the Shuttle's humidity condensate ***by an in-line adsorption device under microgravity conditions.***

4. ***To analyze treated condensate samples postflight to determine which contaminants are not efficiently removed by the device.***

RATIONALE/JUSTIFICATION
Recent mechanical difficulties experienced with the humidity condensate separator of the Atmospheric Revitalization Subsystem (ARS) have revealed the need to characterize the content of the condensate. The separator is responsible for air/water separation following condensation by the cabin heat exchanger. Problems with the separator have been traced to a clogged water collection device (i.e., pitot tube).

There is currently no active system on STS to remove ammonia from the atmosphere. This has not been a problem to date because, it is thought, that limited mission length in combination with lithium hydroxide, used for carbon dioxide removal, and humidity control have provided sufficient removal and control. The EDO missions, with their additional duration and solid amine carbon dioxide removal system, will potentially place more reliance on the humidity control (condensate) system for ammonia and possibly organic control.

Analysis of the chemical quality of the humidity condensate generated in flight will allow an assessment of the ammonia and volatile organic removal capability of the cabin heat exchanger.

Adsorption technology, using combination of ion exchange resins and activated carbons, has been demonstrated through ground-based testing to be an effective method for removal of inorganic and organic contaminants from humidity condensate and other waste waters. This technology has not been thoroughly demonstrated in a microgravity environment. Purification of Shuttle condensate by adsorption inflight may provide a solution to the past problems experienced with clogging of the overboard dump nozzle caused by particulates in the Shuttle waste water. It would also provide greater flexibility for Shuttle waste water transfer to the Space Station during future long duration missions.

SUPPORT REQUIREMENTS, GROUND TEST AND CHECKOUT

1. **Ground Support Test and Checkout::**
   KSC prelaunch support required to do the following: A hose with a quick disconnect (QD) will be routed from a coupling at TP49 to the Lower Equipment Bay (LEB) Access Hatch (MD44F). The hose with QD will be routed and secured to existing Orbiter structure with wire ties and Velcro® at KSC prior to launch.

2. **Ground Support Equipment:** N/A

FLIGHT EQUIPMENT/HARDWARE REQUIRED

1. **Standard Orbiter or Crew Equipment/Hardware:** N/A

2. **Unique Equipment/Hardware/Software:**
   a. Equipment/Hardware/Software
      (1) ***Adapter Hose Assembly (installed prior to launch)***
      (2) ***Shuttle Condensate Adsorption Device (SCAD)***
      (3) Water Dispenser Valve Assembly (WDVA)
      (4) Large Modified Beverage Containers *(8)*
      (5) Small Modified Beverage Containers *(8)*
      (6) Accessory Kit

   b. Delivery Date: Launch minus 30 Days

   c. Instrumentation: N/A

   d. Constraints or Special Requirements:
      To minimize degradation, refrigerated or frozen storage of the treated and raw condensate samples is desired. If equipment for storage at these temperatures is not available, samples may be stored at ambient temperature.
   e. Consumables: N/A

   f. Total Weight and Volume of Flight Hardware:
      (1) Launch: ***Total Weight = 8.6 pounds (lbs)=3.9 kilograms***
      (This includes the pre-launch installed Adapter Hose Assembly which is approx. 1.6 lbs.)

      Total Volume = 2/10 locker

      (2) Landing: ***Total Weight = 30 lbs = 13.6 kilograms***
      Total Volume = 1/2 locker

   g. Design Requirements, Certification, and Criticality:

(1) Criticality per NHB 5300.4	[X] Non Critical
(2) Certification Process	[X] GFE Board
(3) Design Requirements NHB 5300.4	[X] Non-Critical NSTS 21096,
(4) Hardware is:	[X] CRIT III

   h. Late Access/Early Return:
      Early retrieval and return of condensate samples to Flight Projects personnel (within 24 hours) is required. Samples should be refrigerated at 36 + 4°F or frozen upon removal from orbiter storage and maintained until returned to JSC.

PLACARDS/LIMITATIONS: N/A

FLIGHT DURATION, NUMBER OF FLIGHTS, and CREWMEMBERS REQUIRED:

1. **Flight Duration:** N/A

2. **Number of Flights:** 2

3. **Crewmembers Required:**
   Two crewmembers, one as operator and one as backup.

INCLINATION, ATTITUDE, ALTITUDE, or LOW-G-REQUIREMENTS: N/A

ORBITER CONSTRAINTS:
The cabin temperature selector will be manually adjusted to full cool during sampling and returned to normal operation upon completion of sampling.

ORBITER POWER: N/A
ORBITER CONSUMABLES: N/A
ORBITER COMMANDS: N/A
DATA/DOWNLINK: N/A

PHOTO/TV REQUIREMENTS:
Four still photographs of the equipment during sample collection. Two photographs with the Shuttle Condensate Adsorption Device (SCAD) installed and two without the SCAD installed.

ORBITER POWER: N/A
SPECIAL LIGHTING, WATER, WASTE DISPOSAL, ETC.: N/A

TEST CONDITIONS/ACTIVITY REQUIRED

1. **Flight Requirements and Procedures:**

   a. Preflight:
   Two familiarization and training sessions to be conducted in the ***JSC Building 37 laboratory and/or*** CCT configured for on-orbit operations.

   b. In flight:
   PREPARATION: The cabin air temperature selector ***is*** put into "full cool" mode, the LEB access hatch located at MD44F opened, and ***the SCAD and/or*** water dispenser valve assembly ***is*** mated with the QD on the hose installed preflight. ***Attach the water dispenser valve assembly only for untreated samples. The Shuttle condensate adsorption device (SCAD) is attached just upstream to the water dispenser valve assembly for treated samples.***

   SAMPLE COLLECTION: In order to collect a representative sample, it is necessary to waste the first few volumes of condensate: a ***small modified*** beverage bag is connected to the water dispenser valve, the valve opened for ~~5~~ ***60*** minutes, then closed and the bag removed and placed into the wet trash.

   To initiate collection of the condensate, the a large modified beverage container ~~will be~~ ***is*** connected to the water dispenser valve assembly and the valve opened. The LEB hatch will remain open during collection of the sample to allow the crewmember to periodically inspect the bag for degree of fullness. (The rate of condensate collection will depend upon the number of crewmembers on the mission and the activities occurring during sampling. The time required to collect 1 liter of condensate generated by a crew of seven is approximately ***4 hours***).

   When the ***large*** modified beverage container is full, the water dispenser valve is closed, the container ***is*** removed, placed into an overwrap bag and stowed.

Repeat this collection process for both treated samples (SCAD in place) and untreated samples (SCAD is removed and stowed), collecting one sample of each on each designated flight day.

END OF DAILY SAMPLING: When sampling is complete reset the cabin air temperature to normal operation. Prior to closing the LEB hatch, the water dispenser valve assembly will be visually inspected and replaced if necessary. The water dispensing valve assembly may remain connected for additional sampling but must be disconnected and stowed prior to deorbit burn.

END OF MISSION STOWAGE: Disconnect and stow the water dispensing valve assembly and Shuttle condensate adsorption device.

A maximum of ~~four~~ ***six*** samples ***(three treated and three untreated)*** is required. Collection on ***three*** separate missions days is desired, ***one treated and one untreated sample on each day.***

c. Postflight: Debrief

2. Schedule:

ACTIVITY	DURATION	SCHEDULE	PERFORMANCE CONSTRAINTS
PREFLIGHT:			
Familiarization	45 minutes	L-120 to L-90 days	In CCT configured for on-orbit operations.
Training	30 minutes	L-70 to L-60 days	In CCT configured for on-orbit operations. Coordinated with a SIM if possible.
IN FLIGHT:			
1. Ascent: N/A			
2. On Orbit Sample Collections (6)	45 minutes ea.*	Any 3 FD's**	Observe bag every 60 minutes during sampling
3. Entry: N/A			
WHEELS STOP: N/A			
POSTFLIGHT:			
Debrief	15 minutes	R+2-14 days	None

*Actual crew time:
15 minutes set-up, 5 ***minutes to change sample containers and reconfigure hardware,*** 5 15 minutes total for periodic observations during the anticipated *8 hours* required to collect -2 condensate samples, 10 minutes wrap up.

** ***During periods of high crew activity, whenever possible.***

WAVE-OFF REQUIREMENTS: N/A

LAUNCH SLIP REQUIREMENTS: N/A

CALIBRATION OF THE WDVA PRESSURE REGULATOR

Procedures:

The following procedures will be used to adjust the Water Dispenser Valve Assembly (WDVA) regulator so that the downstream pressure is less than 10 psig.

1. ____ Assemble test set-up (see attached schematic).

2. ____ Connect BH-1 to house DI water.

3. ____ Turn V-1 to "A", Close TV-1.

4. ____ Remove protectiv~~i~~e cover from WDVA QD.

5. ____ Connect WDVA to BH-2.

6. ____ Turn WDVA "off".

7. ____ Attach WDVA to BH-3.

8. ____ Close TV-2.

9. ____ Turn DI source water "on".

10. ____ Fully open MV-1 for maximum flow.

11. ____ Using PRV-1, adjust pressure so that G-2 reads 25-30 psig. Document pressure on G-2.

    G-2: _____

12. ____ Open TV-1.

13. ____ Using MV-1, set flow to 20-40 mL/min. Measure and document flow.

    Flow: _____

14. ____ Turn V-1 to "B". Turn WDVA "on". Open TV-2.

15. ____ If necessary, adjust WDVA pressure regulator to achieve flow.

16. ____ Verify flow through WDVA.

17. ____ Using WDVA pressure regulator and TV-2, adjust pressure so that G-3 < 10 psig.

18. ____ With TV-2 closed, verify G-3 < 10 psig.

19. ____ Document pressure on G-3.

    G-3: _____

20. ____ Open TV-2.

21. ____ Use nut on WDVA pressure regulator to lock regulator so that knob can not be adjusted.

22. ____ Verify that regulator knob does not turn.

23. ____ With TV-2 closed, verify G-3 < 10 psig.

    If G-3 ≥ 10 psig then unlock WDVA pressure regulator. Using TV-2, adjust WDVA pressure regulator so that G-3 < 10 psig. Go to Step 21.

24. ____ Turn WDVA "off". Turn V-1 to "A".

25. ____ Turn DI source water "off".

26. ____ Disconnect WDVA from BH-2 and BH-3.

27. ____ Replace WDVA QD protective cover.

DSO 317
Calibration of WDVA Pressure Regulator

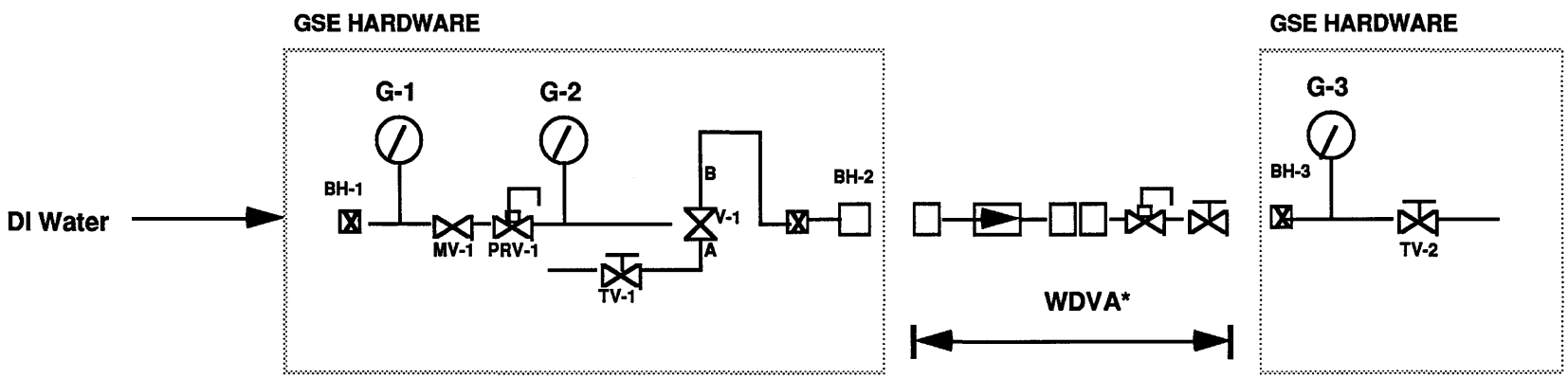

DSO HARDWARE

WDVA: Water Dispenser Valve Assembly (PN SED46106872-301)
(*Note: Needle will be detached from assembly for calibration)

GSE HARDWARE

BH	Connection
G	Pressure Gauge
PRV	Pressure Regulating Valve
MV	Flow Regulating Valve
V	3-way Valve
TV	Toggle Valve

WDVA LEAK CHECK

Procedures:

1. ____ Assemble test set-up (see attached schematic).

2. ____ Connect BH-1 to house DI water.

3. ____ Turn V-1 to "A", Close TV-1.

4. ____ Remove protective cover from WDVA QD.

5. ____ Connect WDVA to BH-2, Verify that WDVA is "off".

6. ____ Turn DI source water "on".

7. ____ Fully open MV-1 for maximum flow.

8. ____ Using PRV-1, adjust pressure so that G-2 = 40-45 psig.

   G-2: _____

9. ____ Open TV-1 to verify flow, Close TV-1.

10. ____ Turn V-1 to "B", Turn WDVA "on".

11. ____ Verify flow through WDVA.

12. ____ Observe WDVA for leaks.

13. ____ If leakage occurs, tighten connections per instructions on WDVA drawing (SDD46104872).

14. ____ Verify that WDVA is not leaking.

15. ____ Turn WDVA "off".

16. ____ Observe WDVA for leaks.

17. ____ If leakage occurs, tighten connections per instructions on WDVA drawing (SDD46104872).

18. ____ Turn V-1 to "A".

19. ____ Turn DI source water "off".

20. ____ Disconnect WDVA from BH-2.

21. ____ Turn WDVA "on" and agitate to remove water.

22. ____ Turn WDVA "off".

23. ____ Replace WDVA QD protective cover.

DSO 317
WDVA Leak Check

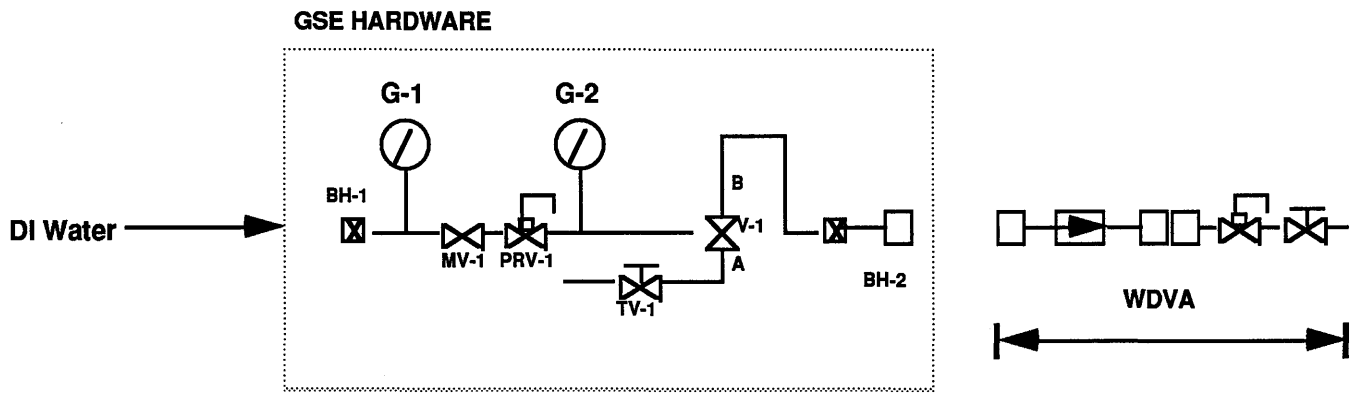

DSO HARDWARE

WDVA: Water Dispenser Valve Assembly (PN SDD46106872-302)

GSE HARDWARE

BH	Connection
G	Pressure Gauge
PRV	Pressure Regulating Valve
MV	Flow Regulating Valve
V	3-way Valve
TV	Toggle Valve

CALIBRATION OF THE WDVA CHECK VALVE

Procedures:

The following procedures will be followed to set the cracking pressure of the Water Dispenser Valve Assembly (WDVA) check valve to 8 psi (±2).

1. ____ Assemble test set-up (see attached schematic).

2. ____ Connect BH-1 to House DI water.

3. ____ Turn V-1 to "A", Turn TV-1 "off".

4. ____ Fully open MV-1 for maximum flow.

5. ____ Connect WDVA check valve to BH-2.

6. ____ Turn DI source water "on".

7. ____ Adjust PRV-1 so that G-2 reads 8 psi (±2).

8. ____ Disassemble WDVA check valve by removing locking screw (per manufacturer's instructions).

9. ____ Turn V-1 to "B".

10. ____ Adjust cracking pressure to 8 psi (±2) (per manufacturer's instructions) with a 5/32" hex key wrench.

11. ____ Turn V-1 to "A", turn TV-1 "off".

12. ____ Reassemble check valve, Attach check valve to BH-3.

13. ____ Briefly open and close TV-2, Turn V-1 to "B".

14. ____ Wait 5 minutes, document pressure on G-2 and G-3.

G-2: _____ G-3: _____

15. ____ Verify that G-2 = 8 psi (±2) and G-3 > 0.

16. ____ Verify check valve is not leaking.

17. ____ Turn V-1 to "A", turn TV-1 to "off".

18. ____ Adjust PRV-1 so that G-2 = 4 psi (±1).

19. ____ Briefly open and close TV-2, Turn V-1 to "B".

20. ____ Wait 5 minutes, document pressure on G-2 and G-3.

G-2: _____ G-3: _____

21. ____ Verify that G-2 = 4 psi (±1) and G-3 = 0.

22. ____ Increase the G-2 pressure by 1 psi increments until G-3 > 0. Document the G-2 and G-3 pressures.

G-2: _____ G-3: _____

23. ____ Verify that the cracking pressure of the check valve is 8 psi (±2).

24. ____ Record the Δp across the check valve.

Δp = _____

25. ____ Turn DI water "off".

26. ____ Turn V-1 to "A", Turn TV-1 to "off".

27. ____ Remove check valve from BH-2 and BH-3.

DSO 317
Calibration of WDVA Check Valve

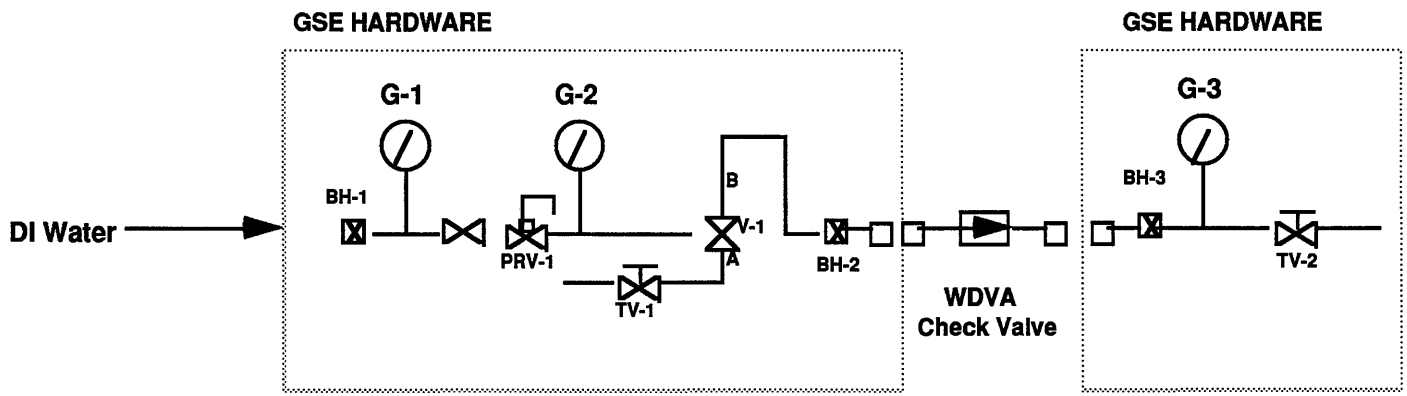

DSO HARDWARE

WDVA: Water Dispenser Valve Assembly (PN SED46106872-301)

GSE HARDWARE

BH	Connection
G	Pressure Gauge
PRV	Pressure Regulating Valve
MV	Flow Regulating Valve
V	3-way Valve
TV	Toggle Valve